ATX LED Inc
1108 Lavaca St Ste 110, #489
Austin Tx, 78701
512 377 6052

http://atx-led.com

AL-PSE-8D
Distribution panel for 800 Watts

Product Description - AL-PSE-8D

This structured wiring panel provides Class 2 power and DALI signals to 8 outputs. Ideal for up to 120 light fixtures and up to 48 Light switches.

It has two power inputs, with power failover management. It is housed in a case ideal for structured wiring panels. Two power inputs are relay routed to 8 outputs providing load balancing and failover.

It uses quick connect 5 amp rated connectors. When used with Class 1 power supplies, the output current is limited per Class 2 to 100 watts (2 amps) . Voltage is is 44 to 56 volts, and passes unchanged to the output. Earth connection is provided for static discharge management.

Ideally matched with 2 Meanwell 350 Watt power supplies, the AL-PSE-8D is a member of the ATX SML family for quick installation in Media Panels.

Failover Power

The Power Distribution has 2 inputs – apply a matched set of 48v (max 52v) power supplies to reach the power budget for the project. If a 500 watt project has 2 500 watt power supplies – then an outage will have no impact. The voltages are monitored by the RJ45 connector that links to the ATX LED Hub.

LED status display

There is 1 Green LED per power input, and one Orange for IEC 62486 DAbus power.

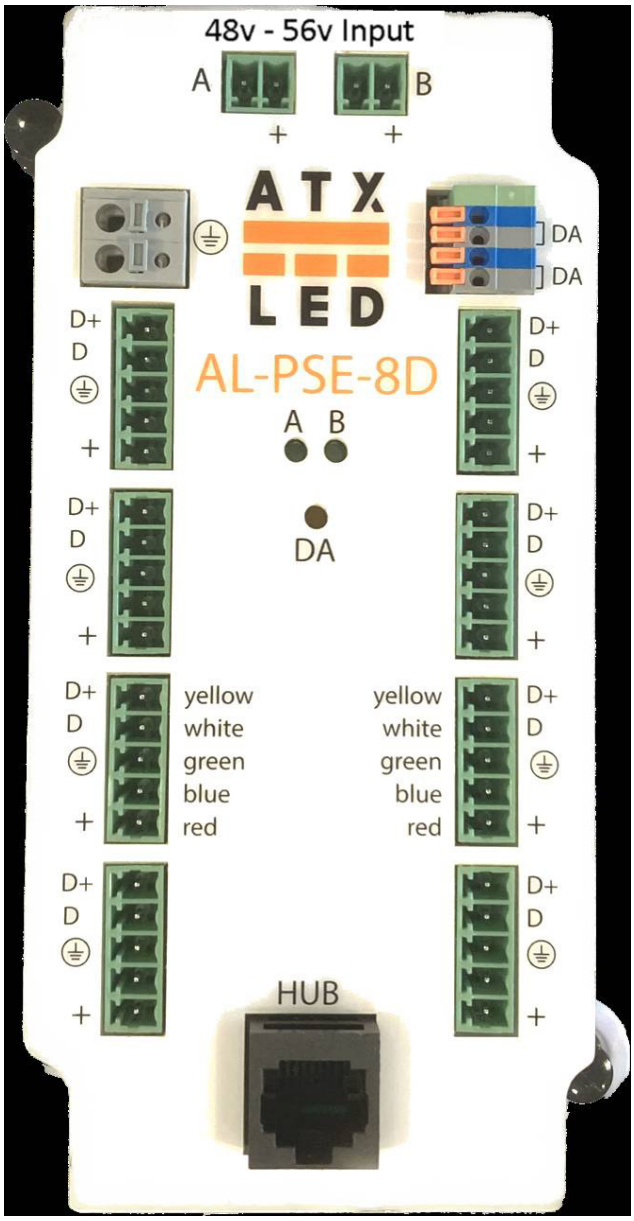

sml Format

This device is a member of the ATX LED sml family for Structured Media Panels. This allows 8 devices in a 14x14 panel. Other devices include our 51v 96w power supply, PSE-4D distribution panel, Raspberry Pi hat, and DALI controlled PoE Switch.

Specifications

Power source	KF 3.81mm connectors (2) 2 pin
Power out and DALI	KF 3.81mm connectors (8) 5 pin
Connector type	CUI TBP02P1-381-02-BE (power in), earth ground CUI TBP02P1-381-05-BE (power and data out)
RJ45 to ATX LED Hub	Power from each input, and DALI data
DALI data expander	KF141V connector for additional DALI distribution panels.
Failover	Relays from 2 DC power inputs assures all outputs are live
Input voltage range	44v to 56 volts (for Relay activation)
Current Limit	Each port has a self resetting 2.5 amp fuse
Internal Power consumption	50 milliwatts standby
Protection	Reverse protection and static protection
Operating Temperature	0°C ~ 50°C
Size	70 mm x 147mm x 30mm plus 10mm interlocking tabs
Hot Swap	Yes – can unplug and connect input power live
Earth Ground	Connection for earth grounding
Failover Detection	Cutover at less than 44 volts
Mounting Kit	Leviton 47615-NYL push pins
Jumper to ground RJ45 pin 2	Internal jumper option to ground

RJ45

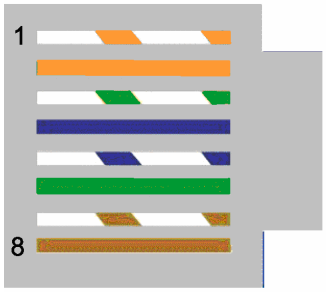

Pin	A
1	DALI +
2	DALI – *
3	NC
4	+ Voltage A
5	+ Voltage B
6	Ground
7	Ground
8	Ground

* Jumper on back to connect to ground

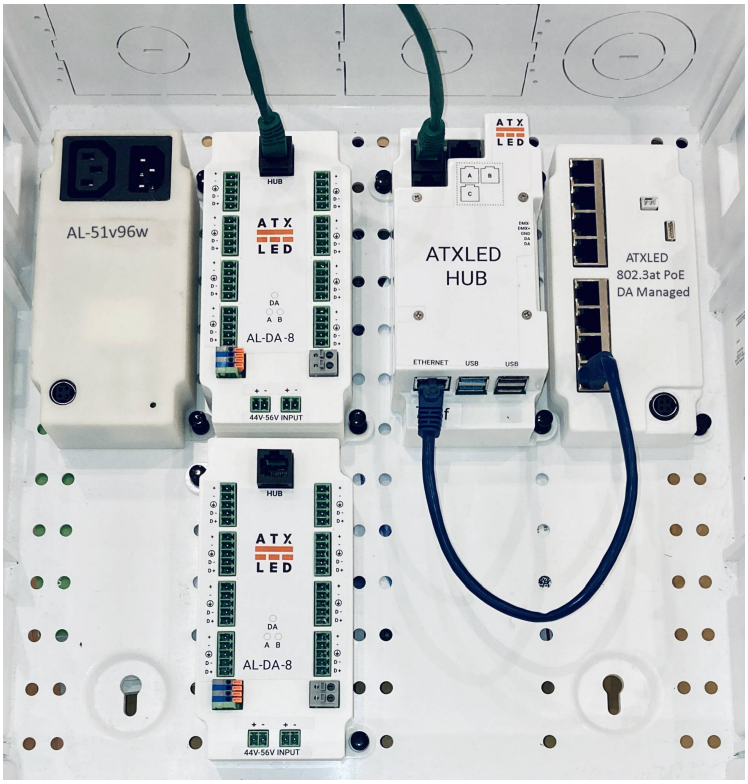

SML Low Voltage modules

The ATX LED SML modules snap into the Leviton 47605 structured media boxes.

The 47605 is 14 inches wide and available with 14, 21, 28 or 42 inch height

A 21 inch 47605 can house 12 of the ATX SML devices.

Since the ATX LED system operates from the same general voltage as PoE, you can use left over PSE power to power WiFi access points and routers.

Quick Connect Power outputs

The KF12EKN 5 pin connector is provided to source 51 volts the Lighting system, on 4 outputs. Each output is connected to the corresponding DIN connector input, unless that input has no power. In case of missing power, internal relays will switch the input power to the outputs. The same connector also has the DAbus and earth ground.

DA+ = Yellow
DA- = White
E = Green
51V - = Blue
51V + = Red

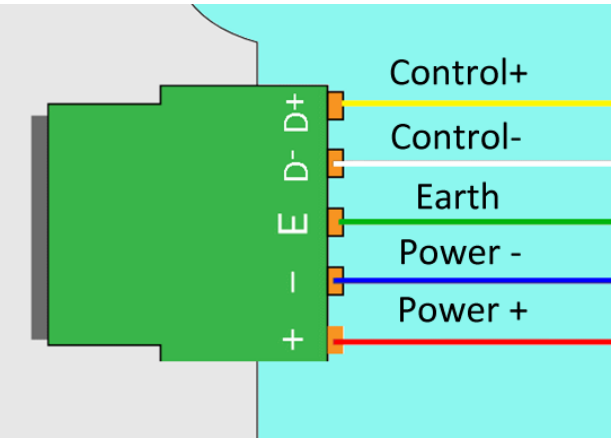

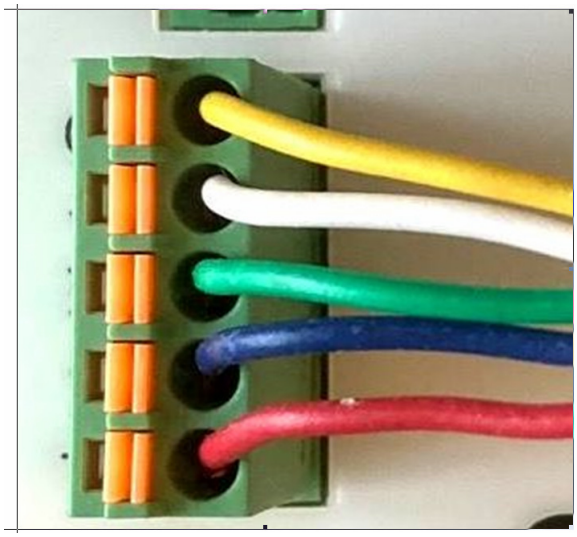

Earth Grounding

Earth grounding is recommended for static discharge of people using the wall switches. In a proper installation with the AL-51v96w power supply – the 120vac power socket should have an earth ground. That earth ground flows thru the DIN4 connector to the outputs. In cases where the AL-PS-51v96w is not used – connect a awg18 wire from the gray connector to an earth ground.

Meanwell Wiring Examples

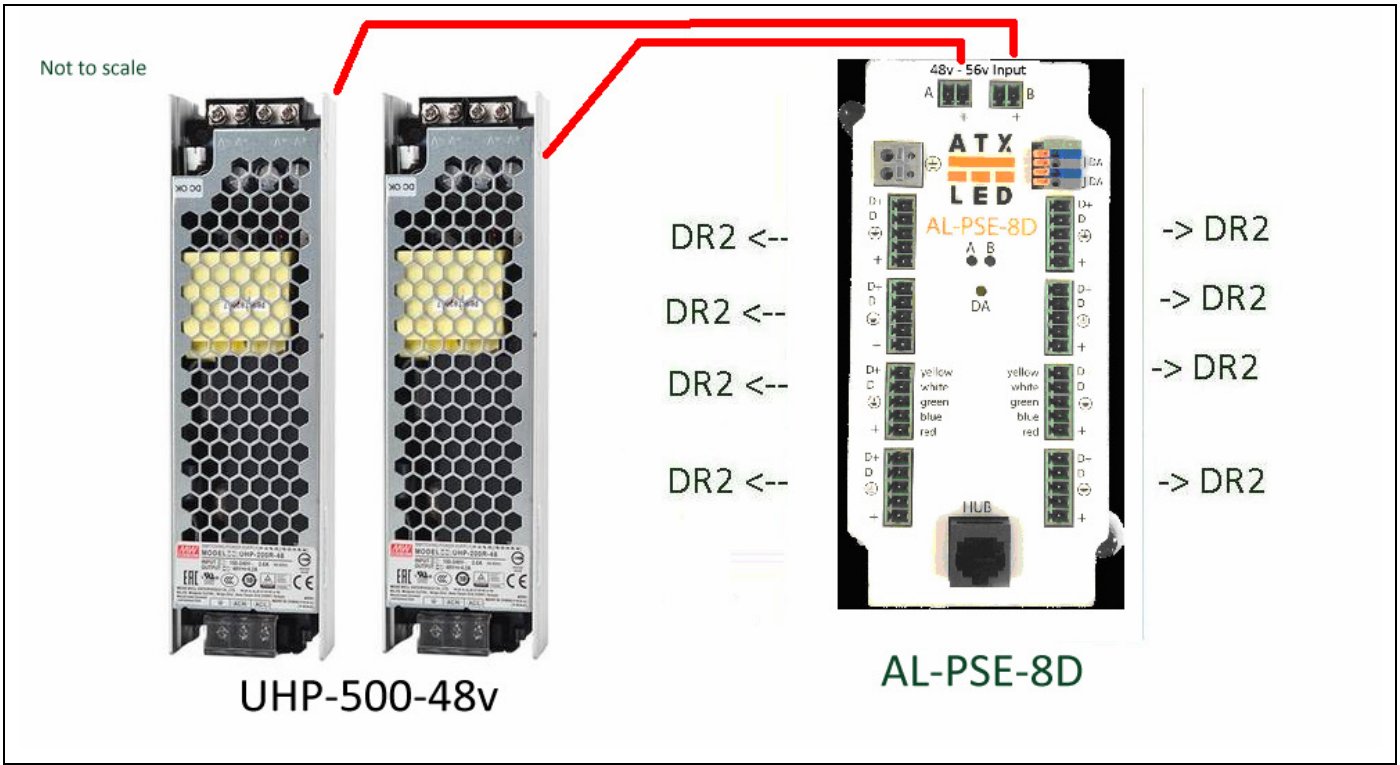

Example of 2 Meanwell-500, AL-PSE-8D and 800 Watts total

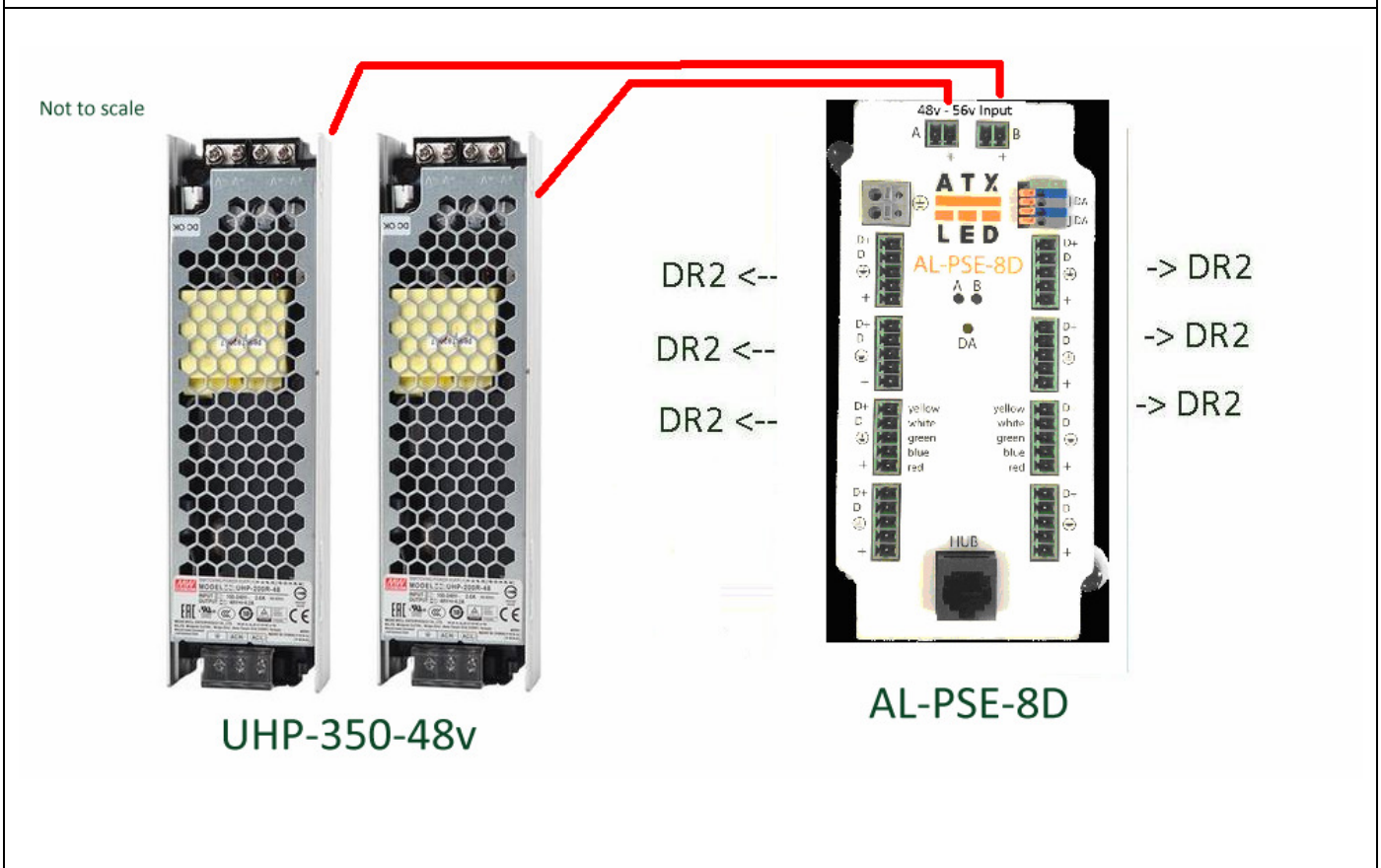

Example of 2 Meanwell-350, AL-PSE-8D and 700 Watts total

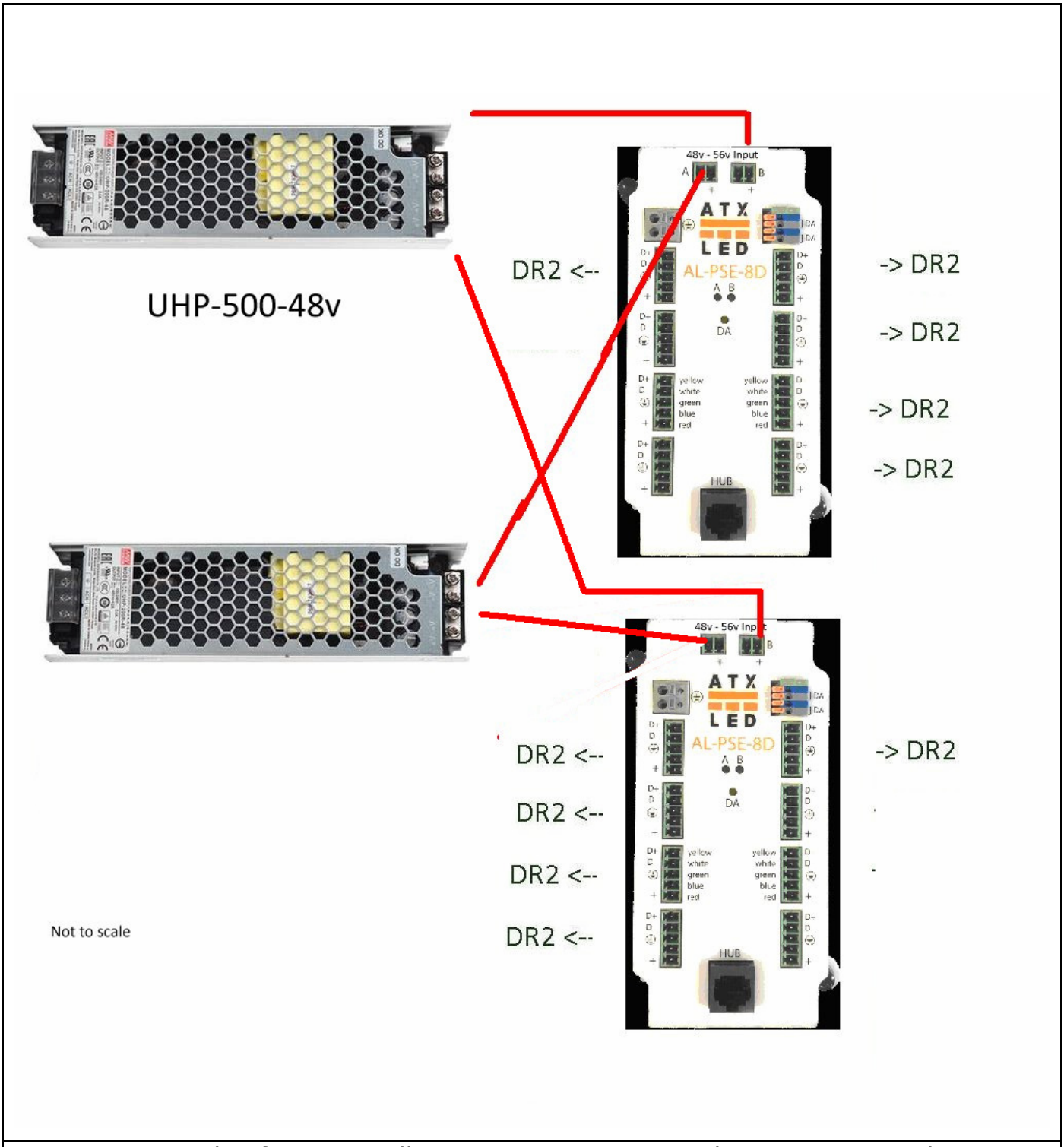

Example of 2 Meanwell-500, 2x AL-PSE-8D and 1000 Watts total

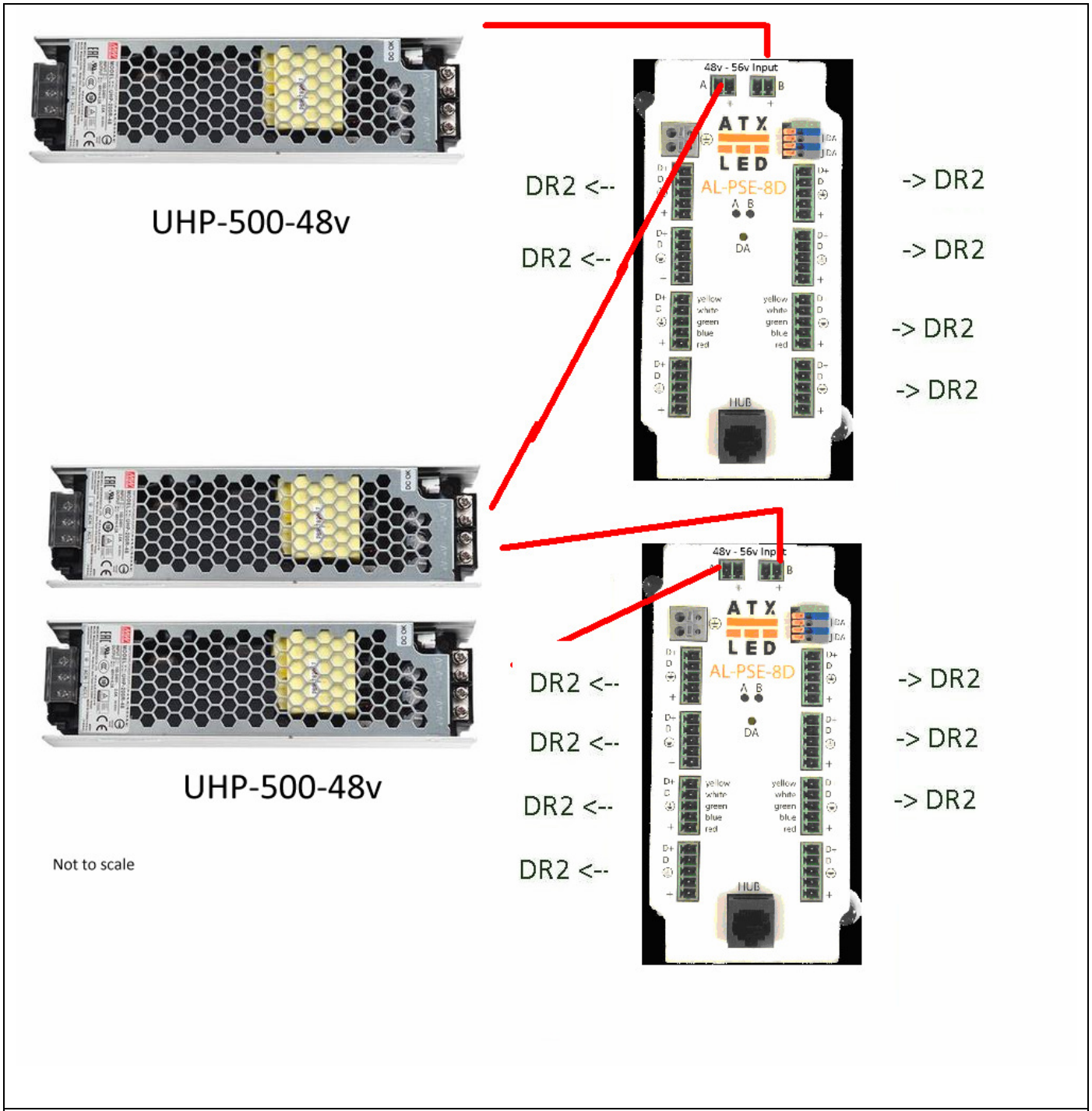

Example of 3 Meanwell-500, 2x AL-PSE-8D and 1300 Watts total

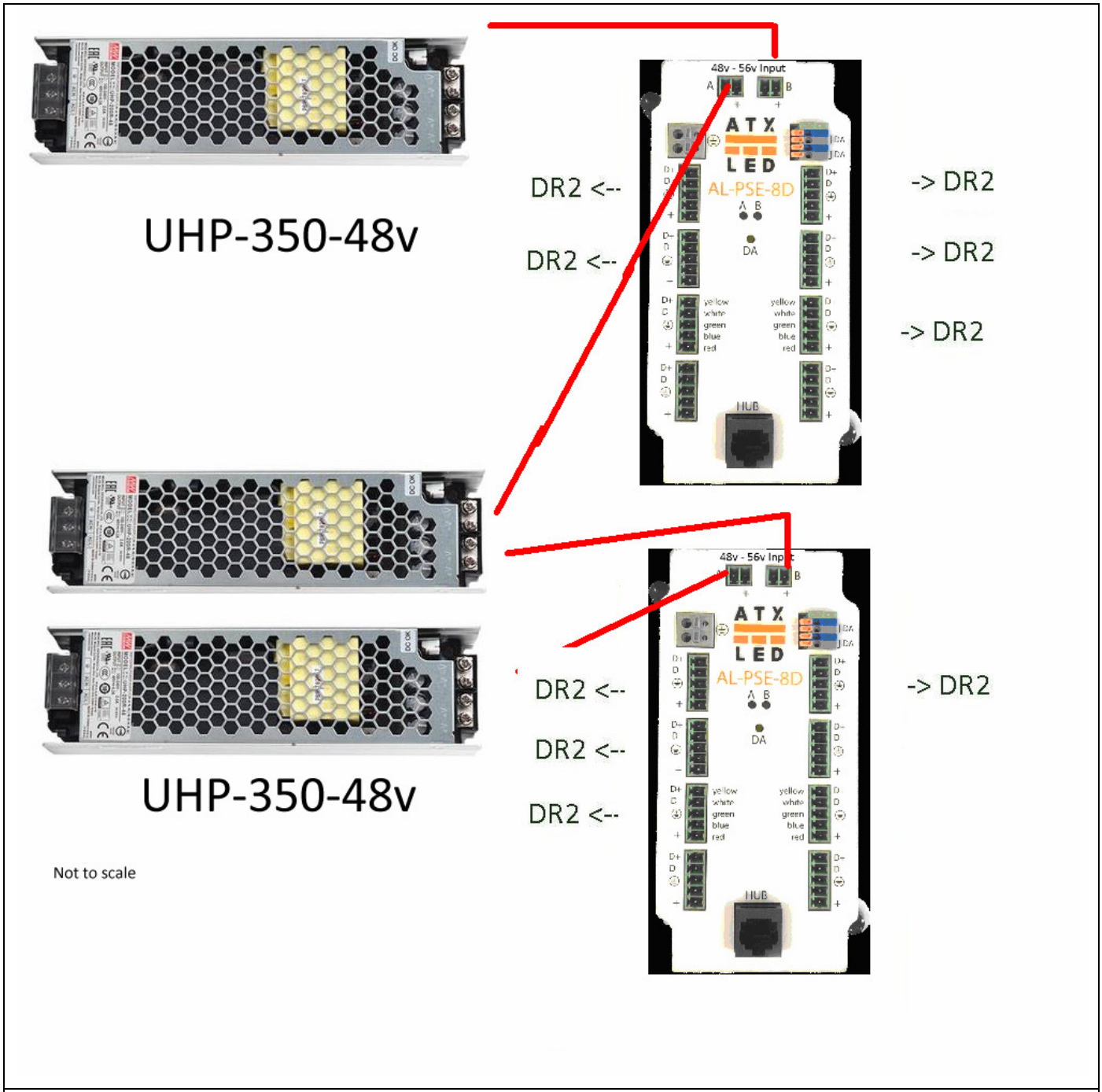

Example of 3 Meanwell-350, 2x AL-PSE-8D and 1050 Watts total

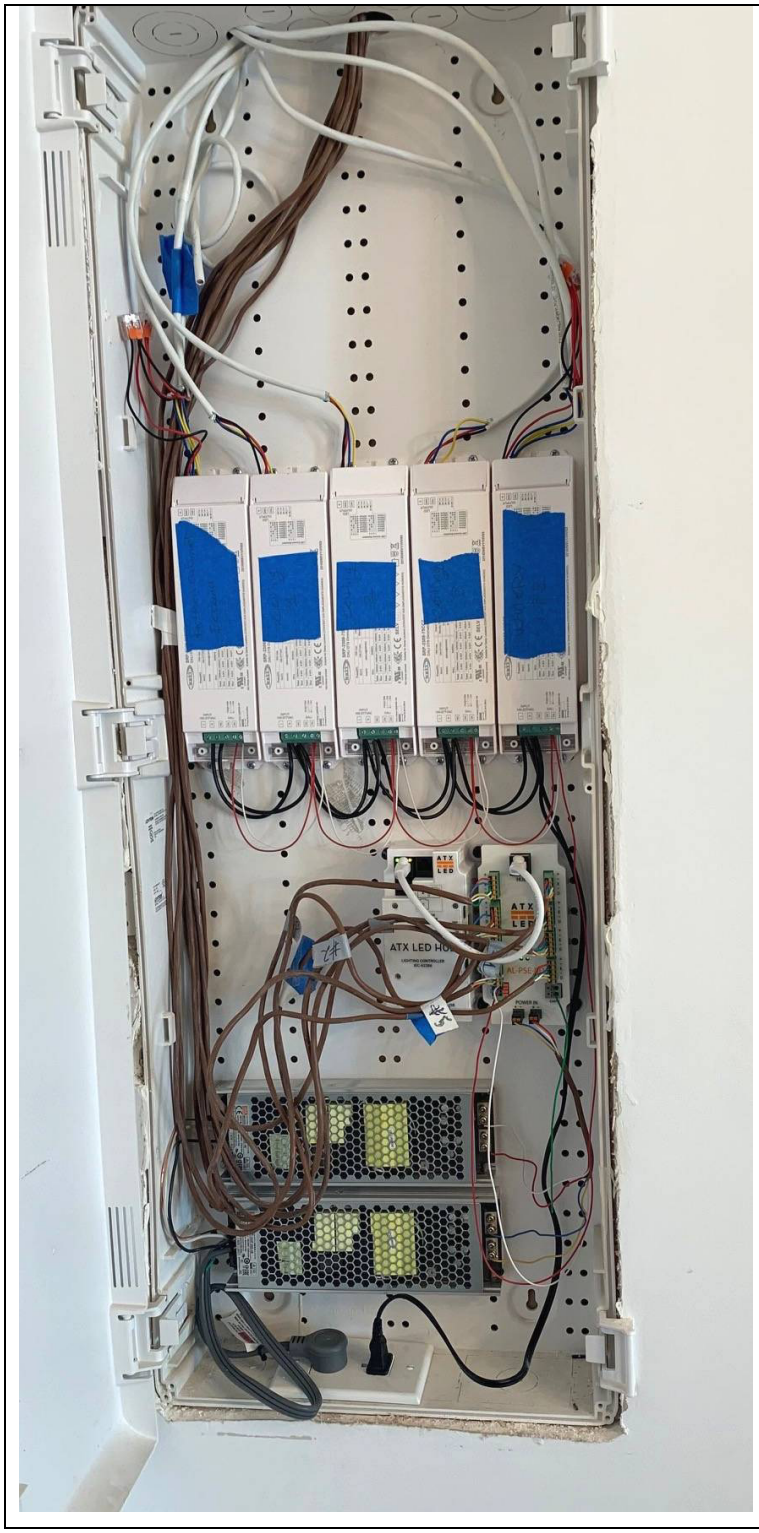

Example of a high end system

(Cables not dressed yet)

5 Units of SRP-2309-75CCT

ATX LED Hub

AL-PSE-8D

2 Units UHP-500 @ 53 volts

Surge Protected power input